W-04-R

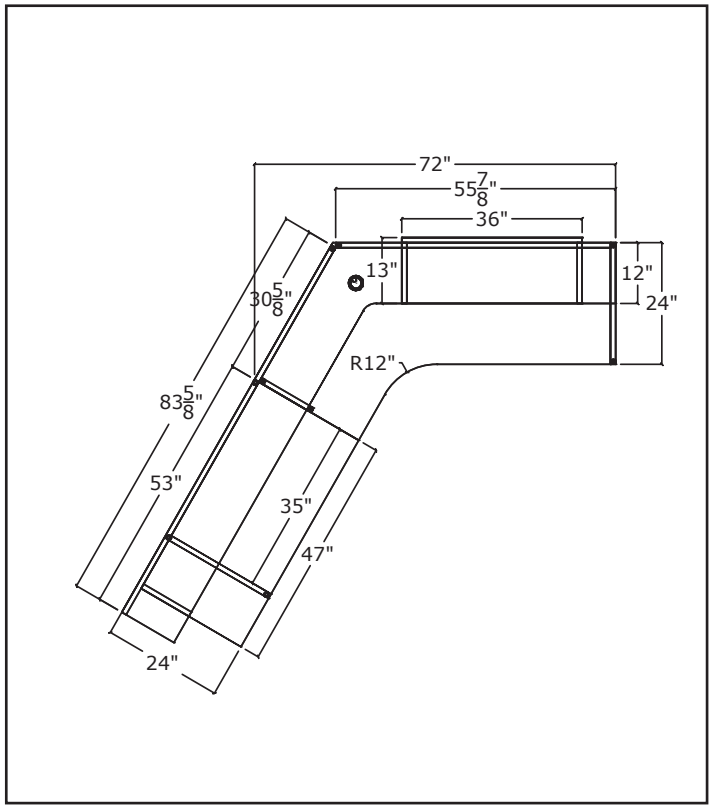

W-04-R

ITEM	QTY	Code	DESCRIPTION	LIST	EXT LIST
A	1	UNRTRANS3613/OP/36H	HANGING TRANSACTION TOP- 36''W X 13''D X 36''H	$536	$536
B	1	W#001	CUSTOM GALLERY DESK - 72''W X 30.625''D X 43''H	$2,284	$2,284
C	1	W#002	CUSTOM GALLERY RETURN - 53''W X 24''D X43''H	$1,451	$1,451
				TOTAL	**$4,271**

EFFECTIVE JANUARY 15TH ADD 7%